01_Info_page.SchDoc

OPTIGA™ Authenticate NBT Development Shield

NBT Secure Shield v1.0 with PSoC adapter

Page	Schematics Page Name
01	Info Page
02	Hardware Architecture
03	NBT Secure Shield

Title: OPTIGA™ Authenticate NBT Development Shield		
Variant: NBT Secure Shield v1.0 with PSoC adapter		
Document Name: 01_Info_page.SchDoc		
Size: A4	Sheet: 1 of 3	Revision: V1.0
Date: 17.06.2024	© Infineon Technologies AG 2024. All Rights Reserved.	

02_Hardware_Architecture.SchDoc

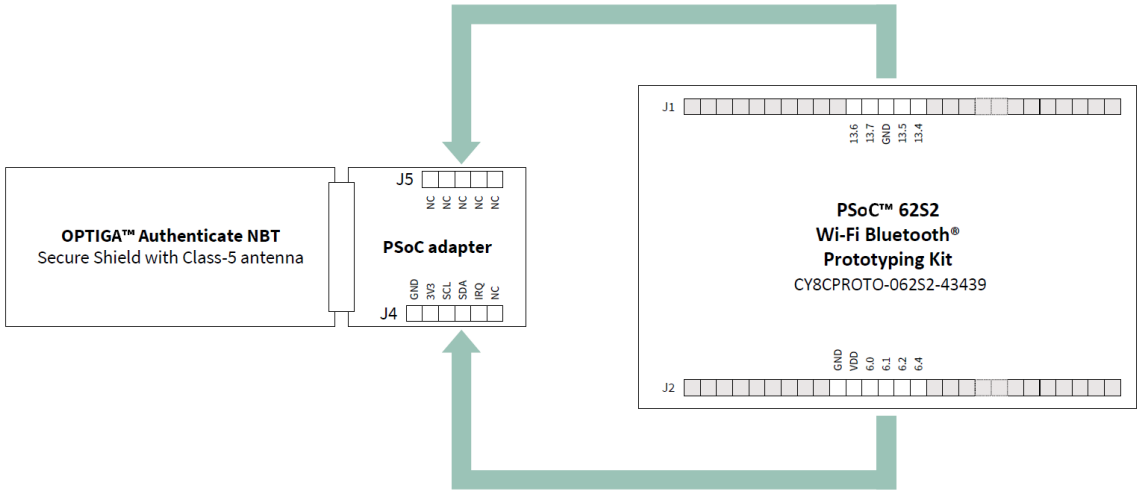

Title: OPTIGA™ Authenticate NBT Development Shield		
Variant: NBT Secure Shield v1.0 with PSoC adapter		
Document Name: 02_Hardware_Architecture.SchDoc		
Size: A4	Sheet: 2 of 3	Revision: V1.0
Date: 17.06.2024	© Infineon Technologies AG 2024. All Rights Reserved.	

03_NBT_Secure_Shield.SchDoc

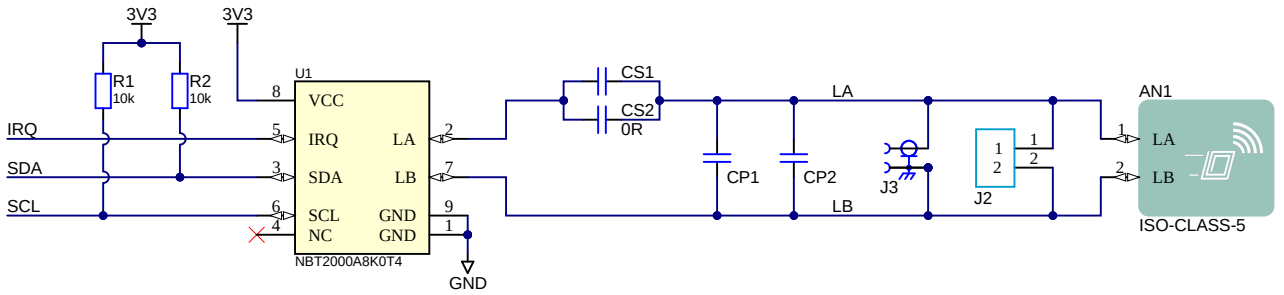

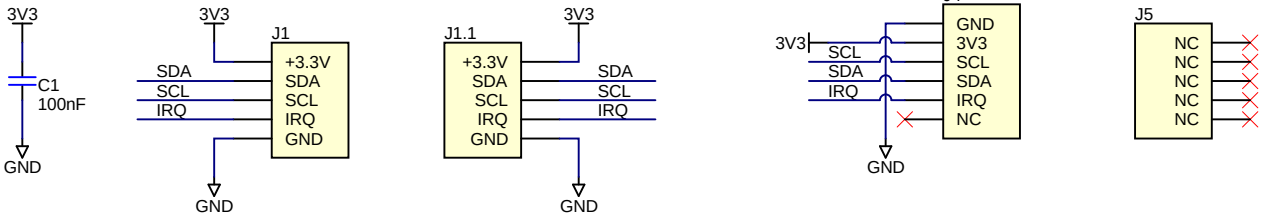

Title: OPTIGA™ Authenticate NBT Development Shield		
Variant: NBT Secure Shield v1.0 with PSoC adapter		
Document Name: 03_NBT_Secure_Shield.SchDoc		
Size: A4	Sheet: 3 of 3	Revision: V1.0
Date: 17.06.2024	© Infineon Technologies AG 2024. All Rights Reserved.	